SURFACE FINISH	
As Machined	
Acid	
Glass Bead	
Orbital Sand	
Powder Coat	
Zinc Plate	
Anodise	
Polished	
Scotch Brite	
DeBurr	X
ENP	
Blackodise	

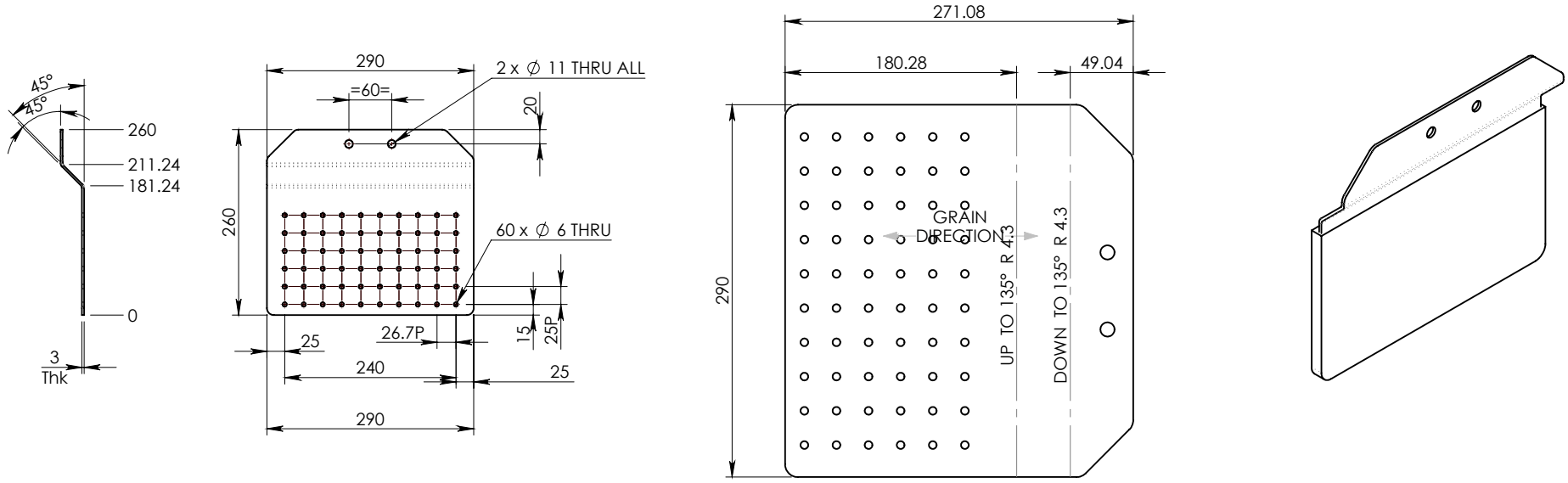

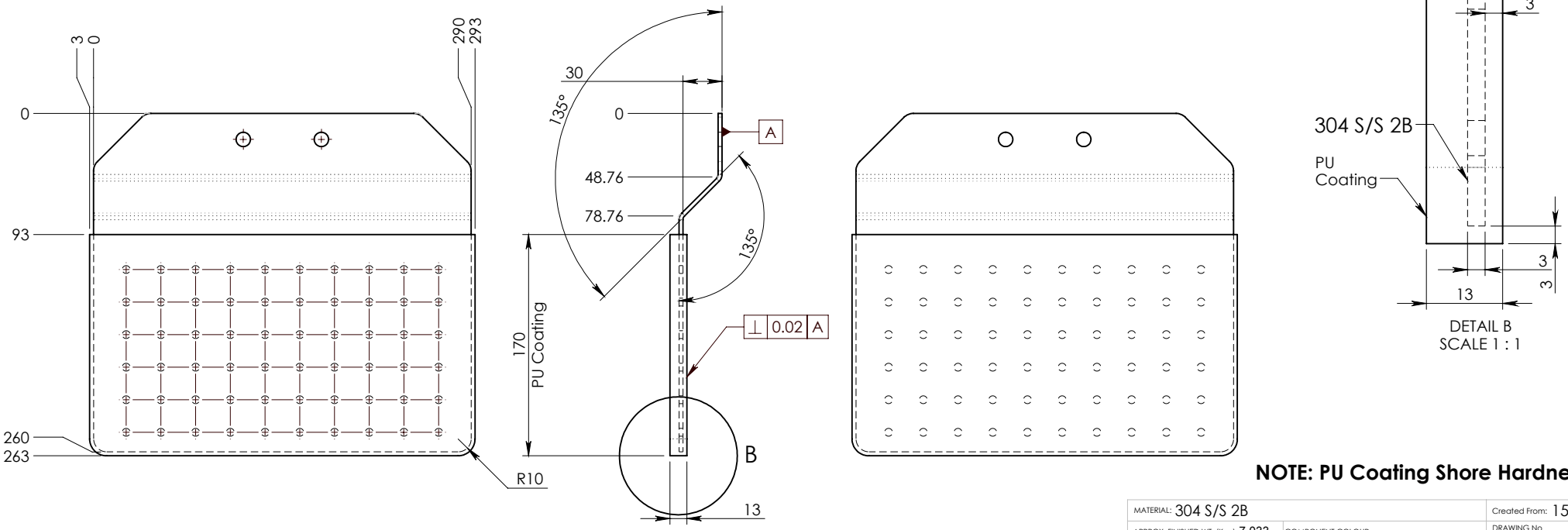

NOTE: PU Coating Shore Hardness-30

MATERIAL: 304 S/S 2B			Created From: 15250-4879
APPROX. FINISHED WT. (K.g.): 7.033	COMPONENT COLOUR:		DRAWING No. 16607A-2548 / REV.
			PRINTED: 25-05-2021 / SHEET
			DESIGN: V Walke / 1/2
REV / BY / DATE	MODIFICATIONS		DRAWN: V Walke

Bector Automation RML India Pvt. Ltd.
Plot No. 24, Gat. No. 613/1,
Kurali, Tal. - Khed
Dist. Pune 410501
Maharashtra, India

COPYRIGHT
© 2024 B.A.R. India Pvt. LTD.
THIS DRAWING MAY NOT BE REPRODUCED OR TRANSMITTED WITHOUT PRIOR PERMISSION

TOLERANCES

NO DECIMAL PLACE	=0	+0.2 -0.2
ONE DECIMAL PLACE	=0.0	+0.1 -0.1
FABRICATION	=0	+1.0 -1.0

ALL DIMENSIONS ARE IN MILLIMETERS

Cobot Case packer & Cobot Palletizer

Pick Head Assembly
Short Side Paddle C