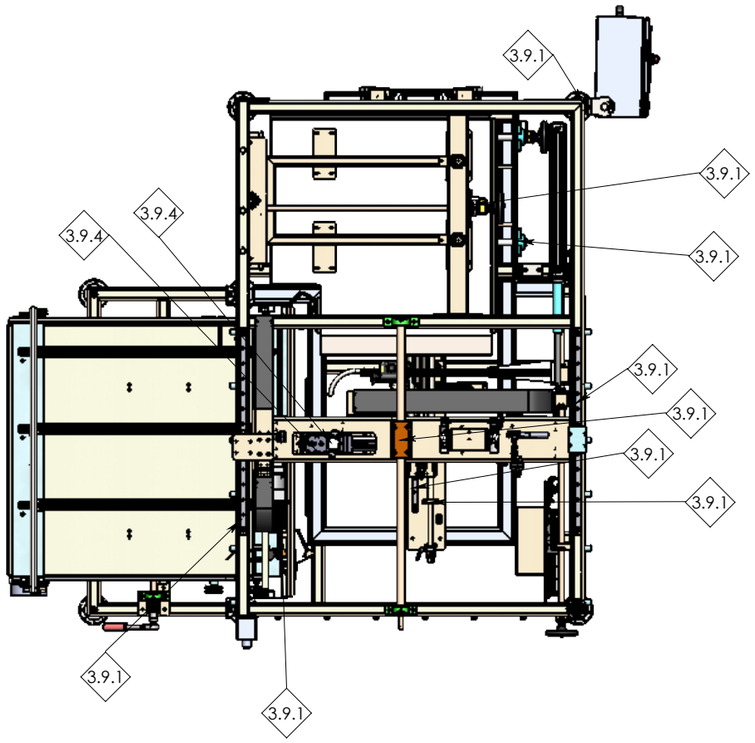

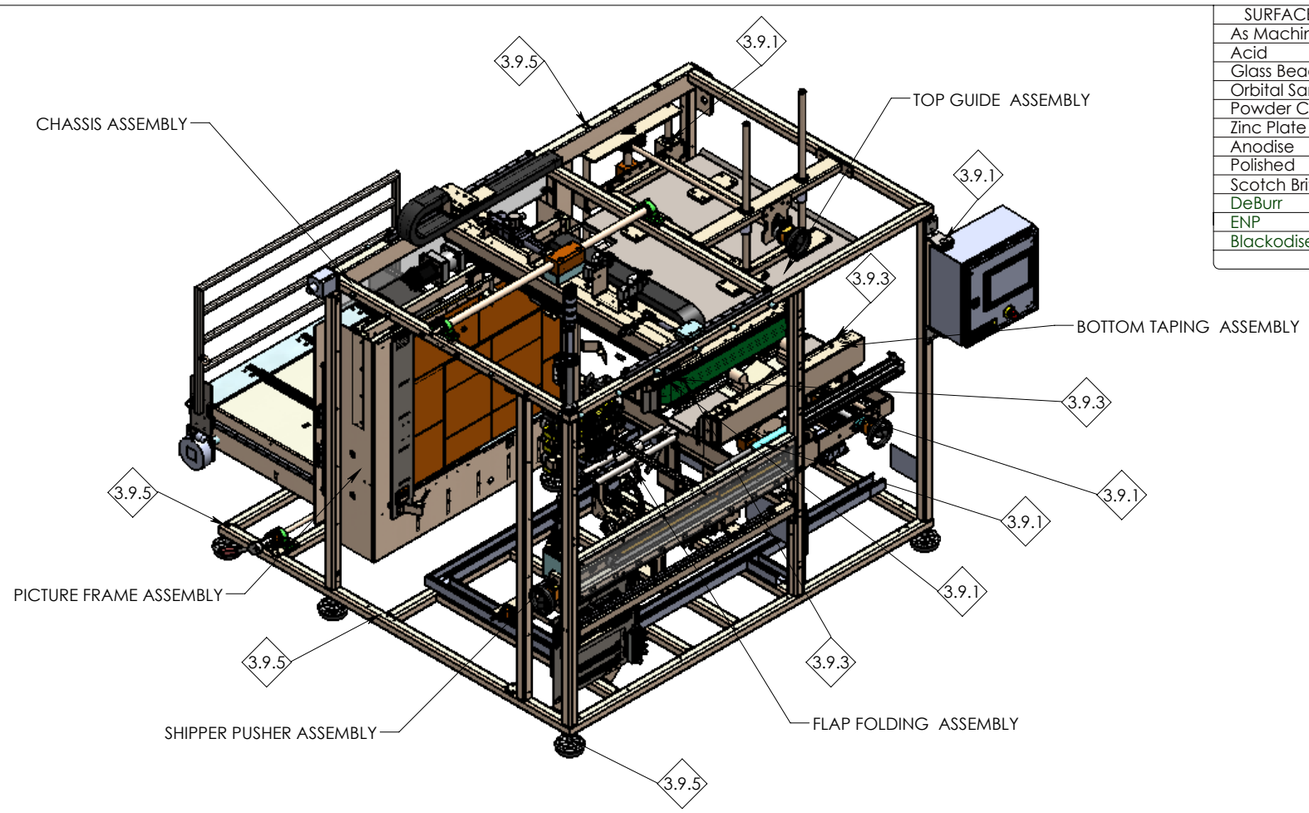

SURFACE FINISH	
As Machined	
Acid	
Glass Bead	
Orbital Sand	
Powder Coat	
Zinc Plate	
Anodise	
Polished	
Scotch Brite	
DeBurr	X
ENP	
Blackodise	

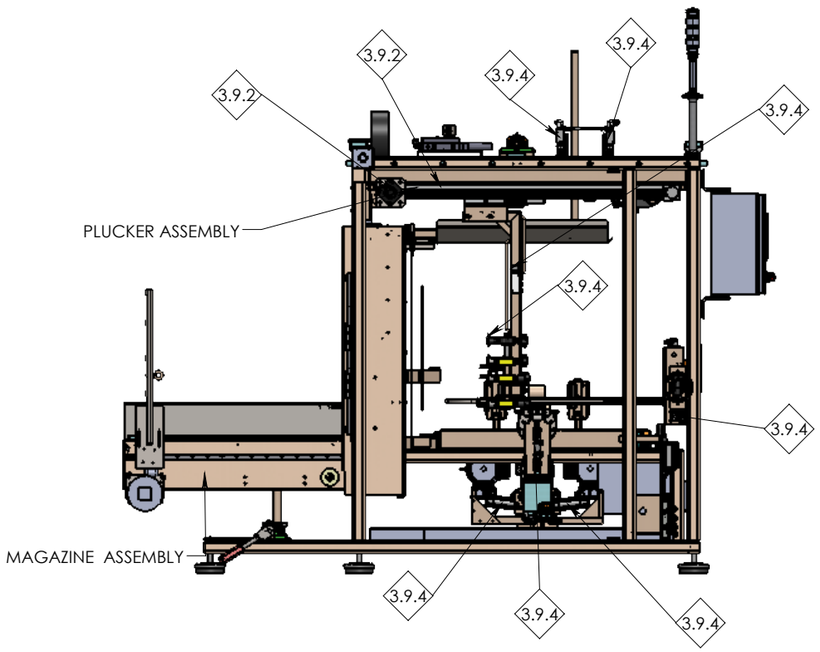

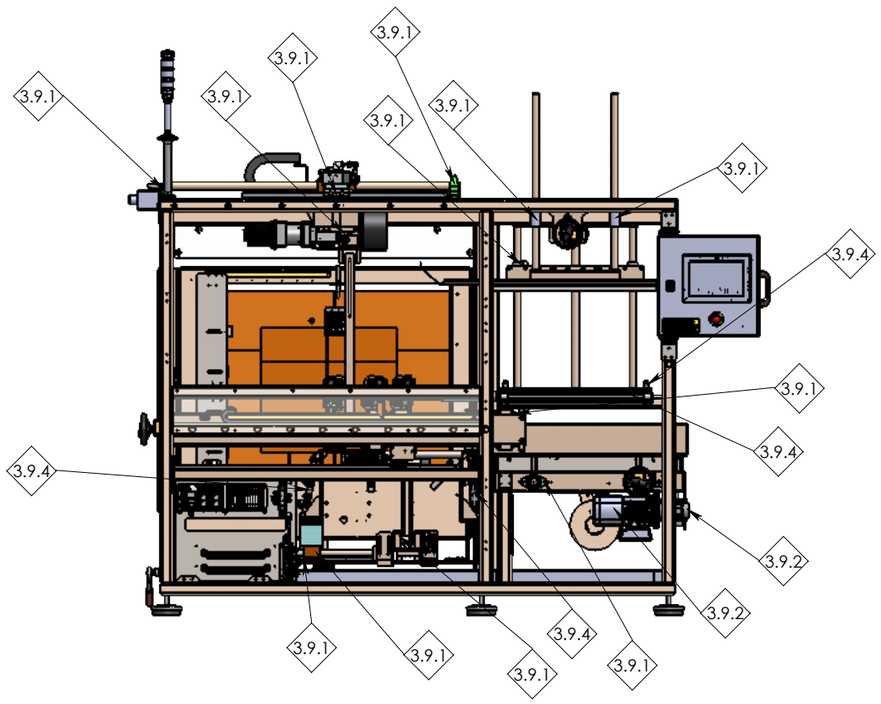

NOTE-CASE ERECTOR MAINTENANCE DWG

MATERIAL:				CREATED FROM:	
APPROX. FINISHED WT. (K.g.): 883309.84			COMPONENT COLOUR:	DRAWING No. 16835-20001	REV.
				PRINTED: 04-03-2026	SHEET
				DESIGN: Rajan V	1/2
REV	BY	DATE	MODIFICATIONS	DRAWN: ABS	

Bector Automation RML India Pvt. Ltd.
Plot No. 24, Gat. No. 613/1,
Kurali, Tal. - Khed,
Dist. Pune 410 501
Maharashtra, India

COPYRIGHT
© 2026 B.A.R. India Pvt. LTD.
THIS DRAWING MAY NOT BE REPRODUCED OR TRANSMITTED WITHOUT PRIOR PERMISSION

TOLERANCES

NO DECIMAL PLACE	=0	+0.2 -0.2
ONE DECIMAL PLACE	=0.0	+0.1 -0.1
FABRICATION	=0	+1.0 -1.0

ALL DIMENSIONS ARE IN MILLIMETERS

16835

CASE ERECTOR