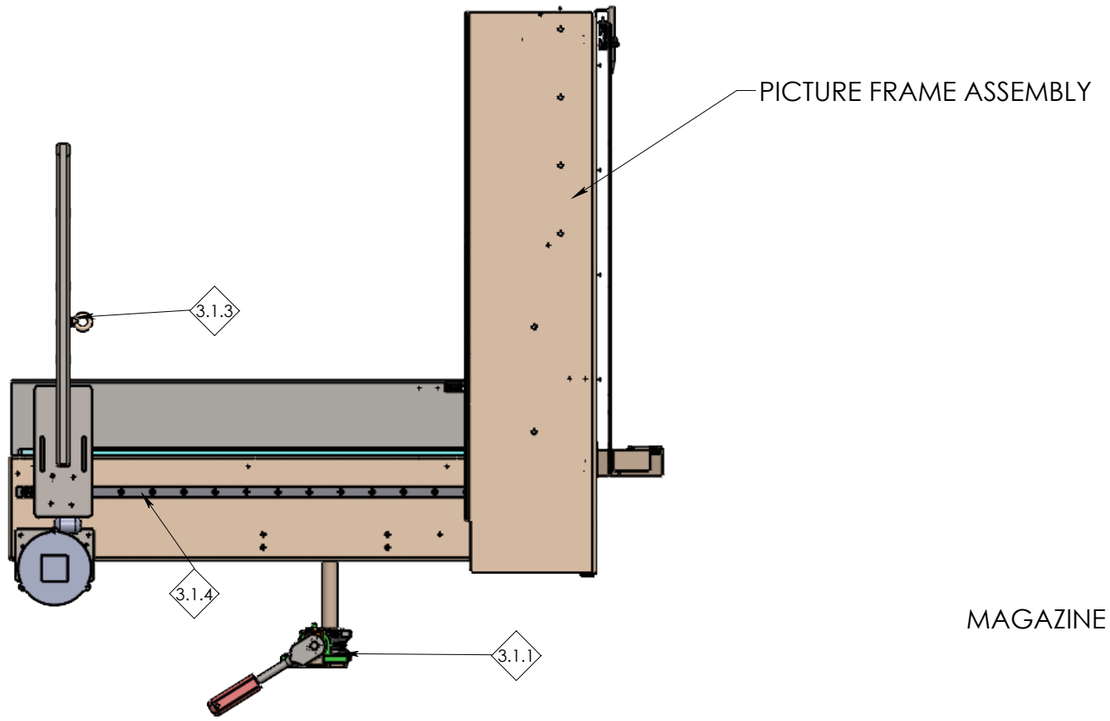

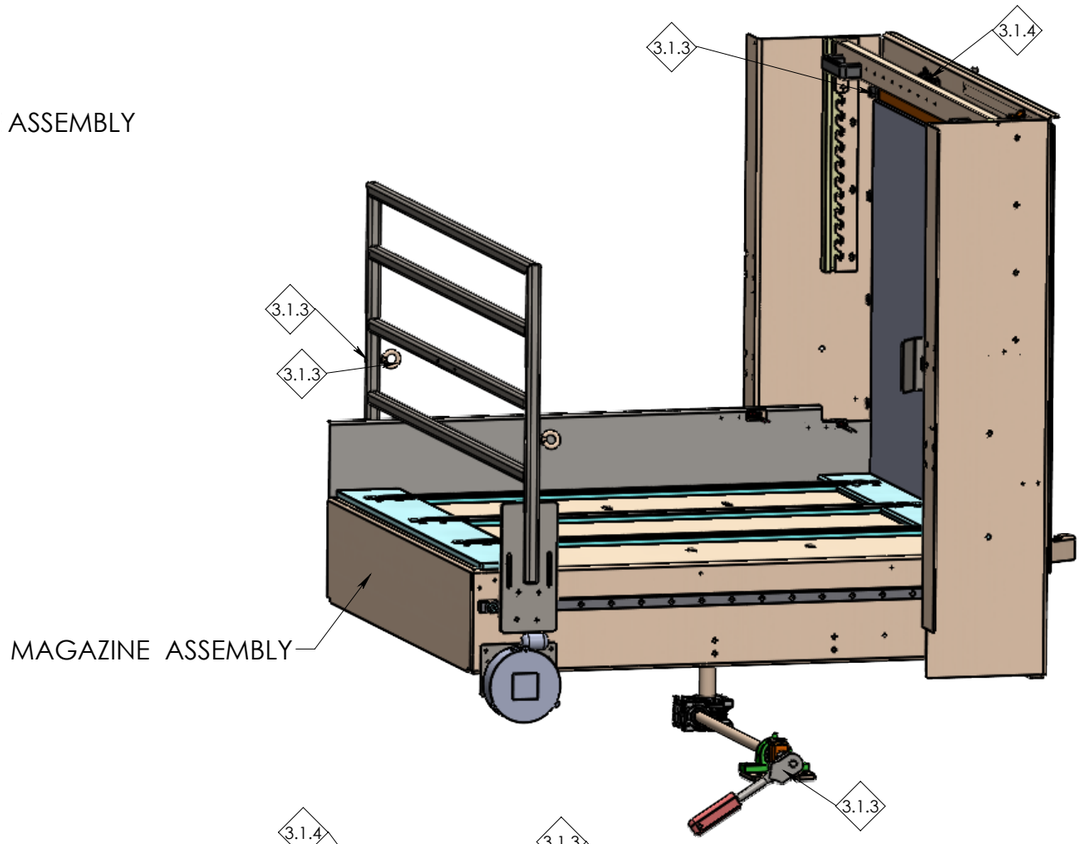

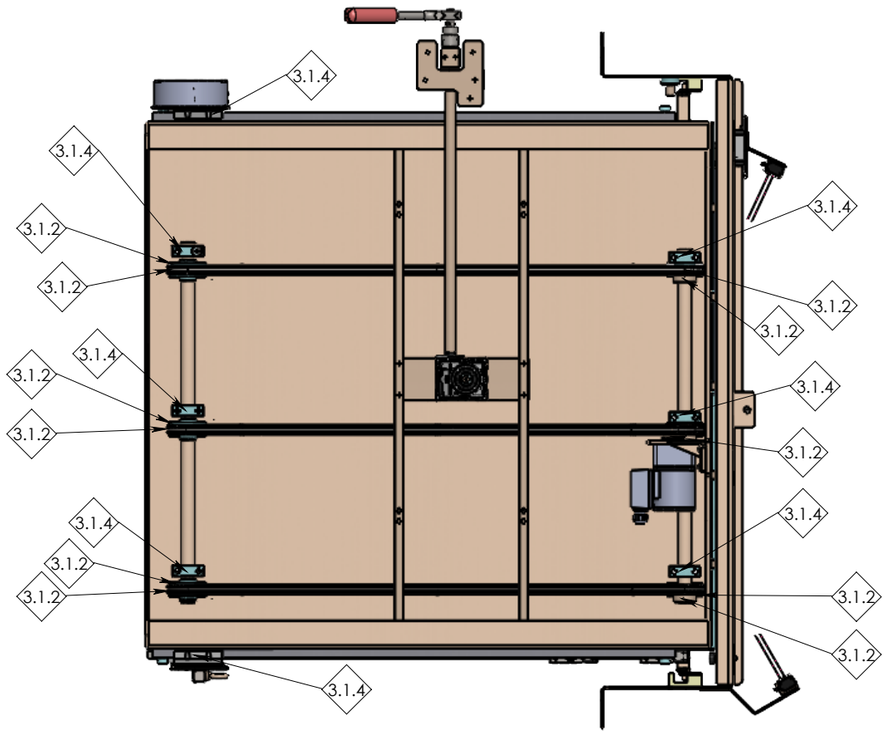

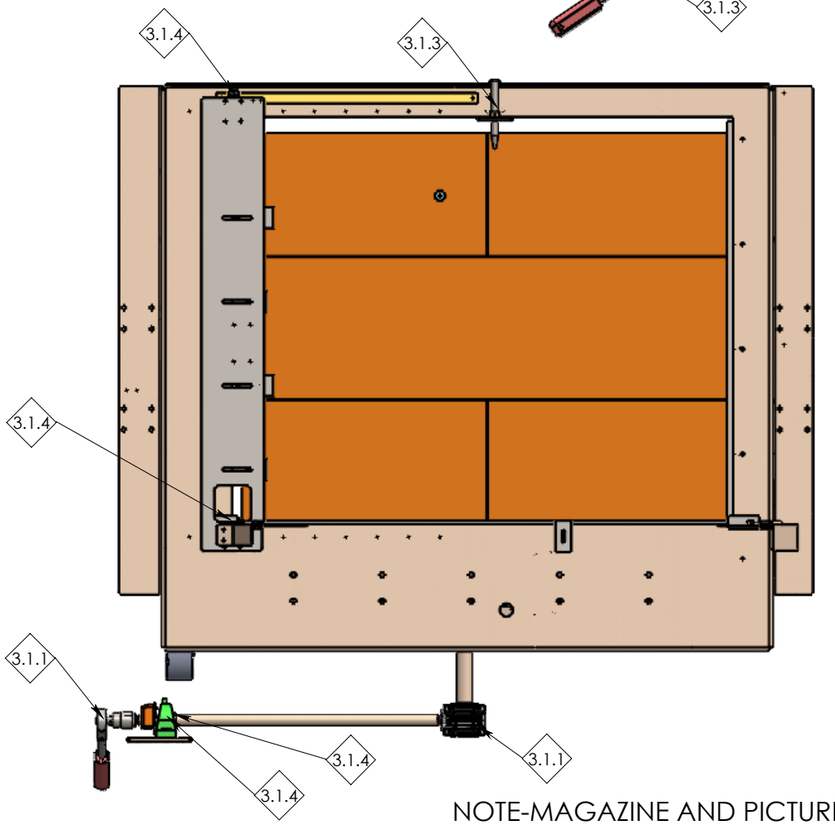

SURFACE FINISH	
As Machined	
Acid	
Glass Bead	
Orbital Sand	
Powder Coat	
Zinc Plate	
Anodise	
Polished	
Scotch Brite	
DeBurr	X
ENP	
Blackodise	

NOTE-MAGAZINE AND PICTURE FRAME MAINTINANCE DWG.

Bector Automation RML India Pvt. Ltd.
Plot No. 24, Gat. No. 613/1,
Kurali, Tal. - Khed,
Dist. Pune 410 501
Maharashtra, India

COPYRIGHT
©01-09-2025 B.A.R. India Pvt. LTD.
THIS DRAWING MAY NOT BE REPRODUCED OR TRANSMITTED WITHOUT PRIOR PERMISSION

TOLERANCES

NO DECIMAL PLACE	=0	+0.2 -0.2
ONE DECIMAL PLACE	=0.0	+0.1 -0.1
FABRICATION	=0	+1.0 -1.0

ALL DIMENSIONS ARE IN MILLIMETERS

16835-Naturelle LLC Case packer for toothpaste packing line no 1
Magazine
MAGAZINE ASSEMBLY

MATERIAL:	CREATED FROM:
APPROX. FINISHED WT. (K.g.): 171564.81 COMPONENT COLOUR:	DRAWING No. **16835-14010** REV.
	PRINTED: 04-03-2026 SHEET
	DESIGN: Rajan V 3/3
REV BY DATE MODIFICATIONS	DRAWN: ABS