SURFACE FINISH	
As Machined	X
Acid	
Glass Bead	
Orbital Sand	
Powder Coat	
Zinc Plate	
Anodise	
Polished	
Scotch Brite	
DeBurr	X

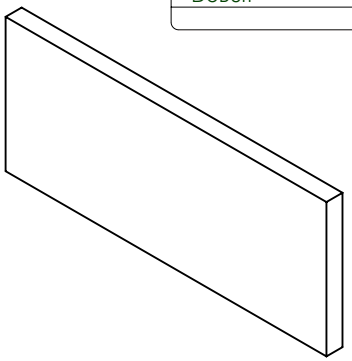

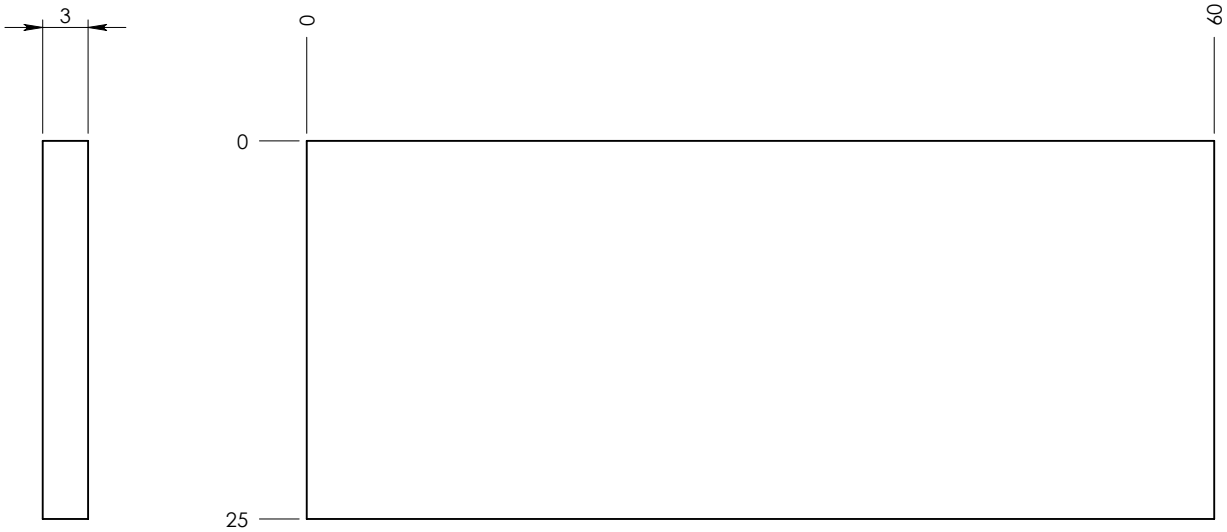

MATERIAL: Lurethane

APPROX. FINISHED WT. (K.g.): 0.035

COMPONENT COLOUR:

Created From: 15066-1929

DRAWING No. **15250-1929**

REV.

PRINTED: 11/14/2018

DESIGN: A. Mahajan

DRAWN: J. Lohar

SHEET 1/1

REV	BY	DATE	MODIFICATIONS

Bector Automation RML India Pvt. Ltd.
Plot No. 149/1, Sector 7
Bhosari, Pune 411 026
Maharashtra, India

COPYRIGHT
© 2016 B.A.R. India Pvt. LTD.
THIS DRAWING MAY NOT BE REPRODUCED OR TRANSMITTED WITHOUT PRIOR PERMISSION

TOLERANCES

NO DECIMAL PLACE	=0	+0.2 -0.2
ONE DECIMAL PLACE	=0.0	+0.1 -0.1
FABRICATION	=0	+1.0 -1.0

ALL DIMENSIONS ARE IN MILLIMETERS

p255i Top Load Case Packer

Top Guide
Lurethane Finger